Sumitomo Cable Specification

SE-*VI

PureDri™ Loose Tube Optical Cable with Figure-8 Self Supporting Steel Messenger Dielectric Core

Totally Dry Stranded Tube Cables with 2 - 216 Optical Fibers

Issued: October 2009

SUMITOMO ELECTRIC
LIGHTWAVE

78 Alexander Drive, Research Triangle Park, NC 27709
Phone (919) 541-8100, Fax (919) 541-8265
WWW.SUMITOMOELECTRIC.COM

General

This specification covers the design requirements and performance standards for the supply of optical fiber cables as described below. The features described in this document are intended to provide information on the performance of Sumitomo Electric Lightwave's optical cable and aid in handling and installation. Please refer to the separate fiber specification for details regarding the optical fiber.

1.1 Cable Description

PureDri™ Loose Tube Optical Cable with Figure-8 Self Supporting Steel Messenger optical cable contains 2 to 216 optical fibers. The color-coded fibers are housed in totally dry, multiple color-coded, plastic buffer tubes, which are stranded around a dielectric central strength member. Dry water blocking tapes and yarns, wrapped around the core, provide protection against water ingress. A ¼" stranded steel messenger is co-extruded with the cable core. The cable sheath is composed of a smooth black medium density polyethylene (MDPE) jacket with, highly visible ripcords are placed underneath for quick sheath entry.

The Steel Messenger Figure-8 cable is designed for self-supporting outside plant installations with maximum typical span lengths of 500 feet under NESC heavy loading conditions.

The PureDri™ Loose Tube cable represents an advancement in loose tube cable technology through elimination of the buffer tube gel and the sticky cable filling gels from the cable core improving cable handling and reducing cable preparation time. Sumitomo's Loose Tube cables meet both RUS (formally REA) and Telcordia requirements.

Our reduced buffer tube of 2.5mm allows for improved closure routing and flexibility while providing maximum protection to the fibers. These buffer tubes also meet the latest RDUP 20 ft express tube requirement.

1.2 Quality

Sumitomo ensures a high level of quality through ISO / TL 9000 registered Quality Management Systems and our commitment to continuous improvement. Guaranteed, high quality products have been manufactured at Sumitomo's facility in Research Triangle Park, North Carolina since 1984.

1.3 Reliability

Sumitomo ensures product reliability through rigorous qualification testing of each product family to meet or exceed industry standards. Both initial and periodic qualification testing are performed to assure the cable's performance and durability in the field environment.

Sumitomo supports industry standards organizations such as Telcordia (formely Bellcore), Telecommunications Industry Association (TIA), Insulated Cable Engineers Association (ICEA), International Telecommunications Union (ITU), International Electrotechnical Commission (IEC), American Society for Testing and Materials (ASTM), Rural Utilities Service (RUS), and The Institute of Electrical and Electronics Engineers (IEEE).

2. Cable Design

2.1 General

Sumitomo's Figure-8 Loose Tube optical cables utilize Reverse Oscillating Lay (ROL) of the buffer tubes for quick and easy midspan entry. The integrated steel messenger eliminates the timely step of installing a messenger before the fiber cable.

Steel Messenger Figure-8 Cable

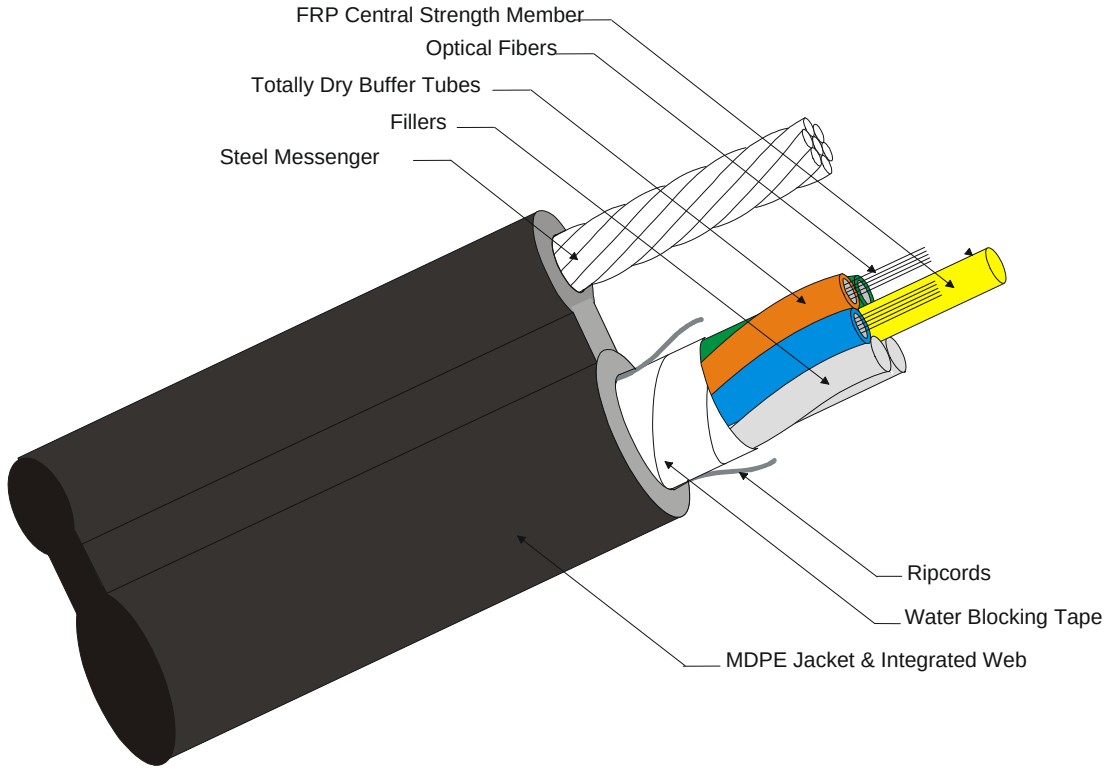

2.2 Fiber Types

The following fiber types are available in this cable design. Please refer to the appropriate fiber specification document for details on fiber design and performance.

APPLICABLE FIBER TYPES		
FIBER TYPE	ITU/TIA CLASS	SUMITOMO SPEC. #
PureBand™ – Zero Water Peak	ITU G.652D TIA Type Iva	SE-5**
PureMetro™ NZDSF	ITU G.655D TIA Type Ivd	SE-7**
PureAccess™ Bend Insensitive	ITU G.657A TIA Type Iva	SE-9**

2.3 Optical Fiber Color Code

The UV acrylate coated fibers are color coded with highly distinguishable, vibrant colors according to the following table. All colors meet Munsell standards as specified in TIA-359 and TIA-598.

FIBER COLOR CODE	
FIBER #	COLOR
1	Blue
2	Orange
3	Green
4	Brown
5	Slate
6	White
7	Red
8	Black
9	Yellow
10	Violet
11	Rose
12	Aqua

BUFFER TUBE COLORS	
TUBE #	COLOR
1	Blue
2	Orange
3	Green
4	Brown
5	Slate
6	White
7	Red
8	Black
9	Yellow
10	Violet
11	Rose
12	Aqua
13	Blue-Black Tracer
14	Orange-Black Tracer
15	Green-Black Tracer
16	Brown-Black Tracer
17	Slate-Black Tracer
18	White-Black Tracer

2.4 Buffer Tubes

Fibers are housed in groups of 6 or 12 within totally dry buffer tubes. The tubes are manufactured with industry standard polybutelene terathylate (PBT). They are colored for easy identification according to the scheme shown above. Superabsorbant yarns are placed in each tube to prevent migration of water through the tube. Industry standard tools and practices can be used to enter the buffer tubes.

BUFFER TUBE DIMENSIONS	
# FIBERS PER TUBE	TUBE DIAMETER
2-12	2.5 mm (0.10 in.)

The buffer tubes are stranded around the Central Strength Member utilizing Reverse Oscillating Lay (ROL). ROL stranding wraps the tubes in one direction for several turns, then in the other direction, and so forth. This technique provides transition points that lend to easy midspan access of a single buffer tube. The number of tubes used depends on the total number of fibers within the cable. Blank fillers are used as necessary to maintain a circular cable structure.

BUFFER TUBE STRANDING		
TOTAL FIBERS IN CABLE	# FIBERS / TUBE	#TUBES & FILLERS
2-72	12	6
74 –144	12	12
146-216	12	18

2.5 Central Strength Member

The central strength member is made of a Fiberglass Reinforced Plastic (FRP). The FRP rod is most popular because of its all-dielectric properties, thus not requiring grounding. The FRP rod provides both tensile and anti-buckling strength to the cable. Some loose tube designs require a PE upjacketing of the central member to allow stranding of tubes in higher fiber count cables.

2.6 Cable Water Blocking

The interstices between the buffer tubes and the jacket layers are protected from water intrusion by a combination of dry waterblocking yarns and tapes. These dry materials are easily removed from the core during cable preparation without the use of cable cleaning solvents.

2.9 Cable Sheath

A black medium density polyethylene (MDPE) jacket is simultaneously extruded over the cable core and a 1/4" asphaltic flooded galvanized steel strand. The messenger and core are joined together by a web of MDPE plastic, which has been designed for easy messenger separation during installation. Two highly visible ripcords are placed under the jacket next to the cable core approximately 180° apart to aid in sheath removal.

2.10 Sheath Marking

The entire length of each cable is marked with the following items:

- "SUMITOMO OPTICAL CABLE"
- Month and Year of Manufacture
- Sequential Length Markings in feet (optional meters)
- Telephone Handset Symbol per NESC Section 350G

All length markings are placed at two foot intervals (one meter intervals if metric length markings are specified). The actual cable length will be within +1%, -0% of the marked length. All markings are in indented in permanent white characters. If remarking is required, yellow markings are used to correct the error in the original markings.

2.11 Cable Dimensions

PUREDRI™ LOOSE TUBE CABLE STEEL MESSENGER FIGURE 8 DIMENSIONS			
FIBER COUNT	JACKET CORE DIAMETER	JACKETED MESSENGER DIAMETER	NOMINAL WEIGHT
2 – 72	11.1 mm (0.43 in)	7.9 mm (0.31 in)	312 Kg/km (210 lbs./kft)
74-144	16.0 mm (0.63 in)	7.9 mm (0.31 in)	408 Kg/km (274 lbs./kft)
146-216	17.1 mm (0.67 in)	7.9 mm (0.31 in)	419 Kg/km (282 lbs./kft)

3. Cable Performance

The finished cables can be subjected to the following mechanical and environmental conditions without a permanent increase in attenuation or damage to the cable.

3.1 Mechanical Performance

MECHANICAL PERFORMANCE			
PROPERTY		TEST PROCEDURE	SPECIFICATION
Low and High Temperature Cable Bend		EIA/TIA-455-37	20 x cable O.D. @ -30°C and 60°C
Impact Resistance		EIA/TIA-455-25	2 impact cycles on each of 3 locations
Compressive Strength:	All-Dielectric	EIA/TIA-455-41	220 N/cm (124 lbs/in.)
Maximum Tensile Load:	During Installation During Service	EIA/TIA-455-33	2700 N (600 lbs) 890 N (200 lbs)
Cable Twist		EIA/TIA-455-85	2 meter length ± 180°
Cable Cyclic Flexing		EIA/TIA-455-104	20 x cable O.D. 25 cycles
Minimum Bend Radius:	During Installation During Service	EIA/TIA-455-37	20 x cable O.D. 10 x cable O.D.

3.2 Environmental Performance

ENVIRONMENTAL PERFORMANCE			
PROPERTY		TEST PROCEDURE	SPECIFICATION
Temperature:	Operation Installation Storage / Shipping	EIA/TIA-455-3	-40 to +70 ^{o}C (-40 to +158 ^{o}F) -30 to +60 ^{o}C (-22 to +140 ^{o}F) -40 to +75 ^{o}C (-40 to +167 ^{o}F)
Cable Aging		EIA/TIA-455-3	168 hours @ 85°C
Cable Freezing		EIA/TIA-455-98	Frozen in Ice
Water Penetration		EIA/TIA-455-82	1 meter for 24 hours
Compound Drip Temperature		EIA/TIA-455-81	80 ^{o}C (176 ^{o}F)
Wasp Spray Exposure		Telcordia GR-20	No Deterioration
Color Coding Permanence		Telcordia GR-20	Colors are Stable after Aging

4. Testing and Inspection

The optical properties of all fibers are measured prior to cable manufacturing and remain traceable throughout the manufacturing process and the lifetime of the cable.

After cabling, we use statistical process control techniques along with periodic verification to insure 100% compliance to attenuation requirements in each length of cable with bi-directional OTDR at all operating wavelengths. Cable dimensional measurements are also made at final inspection and recorded.

5. Packaging and Shipping

Cable is supplied in lengths specified at the time of purchase. Each length will be shipped on a separate non-returnable wooden reel or if specified, a returnable steel reel. The minimum barrel diameter of the reel will not be less than 30 times the cable diameter.

The cable on each reel will be completely covered with a thermal wrap which is fastened to the cable by packaging straps. This wrap is reusable and provides excellent thermal and UV protection to cables sitting in reel yards.

The cable ends will be sealed with plastic protection caps to prevent water penetration and the escape of water blocking gel. The ends will be easily accessible for testing. Optional pulling grips may be factory installed if specified at the time of purchase.

REEL DIMENSIONS							
REEL TYPE	REEL CODE	FLANGE DIAMETER		REEL WIDTH		REEL WEIGHT	
Wood	L-3	850 mm	(34 in.)	580 mm	(23 in.)	32 Kg	(70 lbs)
	L-8	1050 mm	(41 in.)	760 mm	(30 in.)	61 Kg	(134 lbs)
	L-11	1250 mm	(49 in.)	760 mm	(30 in.)	91 Kg	(200 lbs)
	L-15	1350 mm	(53 in.)	910 mm	(36 in.)	106 Kg	(233 lbs)
	L-18	1500 mm	(59 in.)	910 mm	(36 in.)	133 Kg	(293 lbs)
	L-21	1600 mm	(63 in.)	1050 mm	(42 in.)	214 Kg	(471 lbs)
	L-25	1800 mm	(71 in.)	1050 mm	(42 in.)	246 Kg	(541 lbs)
	L-27	1850 mm	(73 in.)	1120 mm	(44 in.)	294 Kg	(647 lbs)
	L-29	1950 mm	(77 in.)	1120 mm	(44 in.)	307 Kg	(676 lbs)
	L-37	2210 mm	(87 in.)	1240 mm	(49 in.)	421 Kg	(927 lbs)
	L-46	2440 mm	(96 in.)	1240 mm	(49 in.)	504 Kg	(1108 lbs)
Steel	414	1270 mm	(50 in.)	810 mm	(32 in.)	109 Kg	(240 lbs)
	415	1420 mm	(56 in.)	810 mm	(32 in.)	130 Kg	(285 lbs)
	416	1680 mm	(66 in.)	810 mm	(32 in.)	155 Kg	(340 lbs)
	417	1980 mm	(78 in.)	840 mm	(33 in.)	241 Kg	(530 lbs)
	420	2130 mm	(84 in.)	1220 mm	(48 in.)	350 Kg	(770 lbs)
	421	2290 mm	(90 in.)	1220 mm	(48 in.)	405 Kg	(890 lbs)
	422	2440 mm	(96 in.)	1220 mm	(48 in.)	539 Kg	(1185 lbs)

Each reel is marked with the manufacturer's name and address, cable type, fiber count, attenuation specs, and cable length. A final inspection test report with attenuation performance data for each fiber is attached to the reel flange along with shipping labels.

REEL USAGE

	REEL CODES							[ft.]	[m]	
WOOD STEEL	**L-18** 417	**L-25** 420	**L-29** 420	**L-37** 421	**L-46** NA	**NA** NA	**NA** NA	30,000	9,140	CABLE LENGTH
	L-15 416	**L-21** 417	**L-25** 420	**L-37** 420	**L-46** 422	**L-46** NA	**NA** NA	25,000	7,620	
	L-15 416	**L-18** 417	**L-25** 420	**L-29** 420	**L-37** 421	**L-46** 422	**L-46** NA	20,000	6,100	
	L-11 415	**L-15** 416	**L-21** 417	**L-25** 420	**L-27** 420	**L-37** 420	**L-37** 421	15,000	4,570	
	L-8 414	**L-11** 415	**L-15** 416	**L-21** 417	**L-21** 417	**L-27** 420	**L-37** 420	10,000	3,050	
	L-8 414	**L-11** 414	**L-15** 415	**L-21** 416	**L-21** 417	**L-27** 417	**L-37** 420	7,500	2,290	
	L-8 414	**L-8** 414	**L-11** 414	**L-21** 415	**L-21** 416	**L-27** 416	**L-37** 417	5,000	1,520	
	L-3 414	**L-3** 414	**L-11** 414	**L-21** 414	**L-21** 414	**L-27** 414	**L-37** 415	2,500	760	
[in.]	0.4	0.5	0.6	0.7	0.8	0.9	1.0			
[mm]	10.2	12.7	15.2	17.8	20.3	22.9	25.4			
	CABLE DIAMETER									

NOTE: Actual reel size used will depend on production capacity, net weight, and reel availability. Check with your sales representative for more details.

6. Installation / Handling Practices

Sumitomo has incorporated a wide range of technical support and training services for our fiber optic cable products into our Technical Support Services (TSS) program. TSS offers training in the areas of cable installation, sheath entry, splicing, testing, and system troubleshooting. The services are available in a variety of media formats and can be customized to better accommodate individual training needs. The TSS program consists of an extensive series of recommended procedure documents, training courses with classroom and hands-on instruction, as well as demonstrational videotapes. Please contact Sumitomo's Customer Service department for more information.

6.1 Properties

Aerial cables can experience two different types of vibratory motion due to wind conditions. The first is *aeolian vibration*. This is a high frequency, low amplitude motion. Theoretical modeling predicts that the Figure-8 style cables will be less likely to initiate aeolian vibration than concentric cables.

The shape of the Figure-8 cable does lead to more drag and lift which can cause *galloping* or *dancing*, the second type of vibratory motion.. This is a low frequency, high amplitude motion that can be minimized by selecting higher tensions, lower sags, and limited span lengths. Also by placing a twist every 3 to 5 meters in the cable , these oscillations can be neutralized.

6.2 Hardware

Dead-end grips are available for attaching to the steel messenger. These grips, manufactured by Preformed Line Products are a slight modification on their popular Guy-Grip® (Guy-Grip® is a registered trademark of Preformed Line Products). Suspension (tangent) clamps are also available.

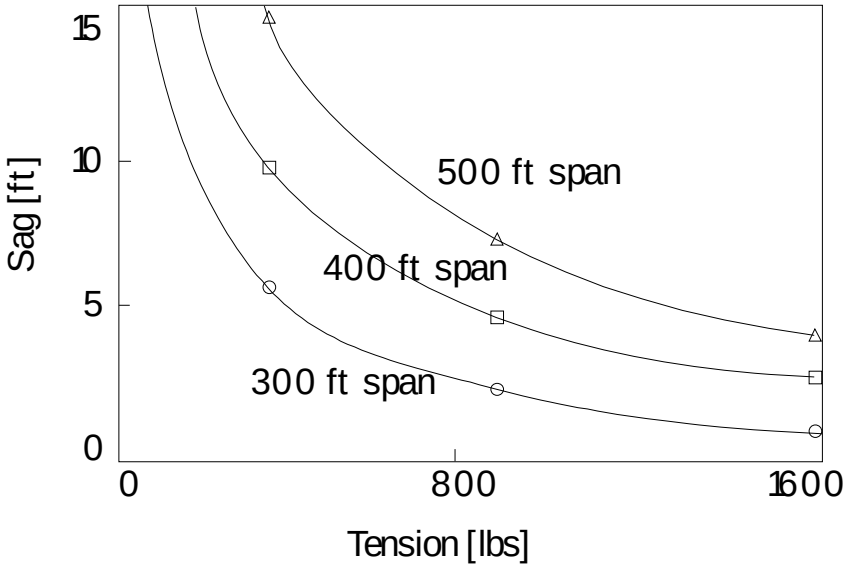

7. Ordering Information

To learn more about Sumitomo's cables or to place an order, call, fax, e-mail, or write us at:

Sumitomo Electric Lightwave Corp.	*Phone:*	*800-358-7378*
78 Alexander Drive		*919-541-8100*
Research Triangle Park, NC 27709	*Fax:*	*919-541-8265*
Attn: Customer Service Department	*E-mail:*	info@sumitomoelectric.com

Sumitomo Electric Lightwave Corp. reserves the right to improve, enhance, or modify the cable's features and specifications. For special requirements different than those shown above, please contact our Inside Sales Department. Each Sumitomo Electric Lightwave Corp. optic cable and/or its manufacture may be covered by one or more of the following US Patents: 4,715,677 4,729,629 4,763,983 4,770,489 4,828,349 4,953,945 5,043,037 5,082,347 5,165,003 D331,567 5,247,599 5,410,901 5,471,555 5,642,452.

Cable and/or its manufacture may be covered by one or more of the following US Patents: 4,715,677 4,729,629 4,763,983 4,770,489 4,828,349 4,953,945 5,043,037 5,082,347 5,165,003 D331,567 5,247,599 5,410,901 5,471,555 5,642,452.